VORTEX COOLERS INDOOR/OUTDOOR

INDUSTRY STANDARDS

NEMA Type 4 Models:
Maintains UL/cUL Type 4 when properly installed on a UL/cUL Type 4 enclosure.

UL508 Listed; Type 4; File No. E187045

NEMA Type 4X Models:
Maintains UL/cUL Type 4X when properly installed on a UL/cUL Type 4X enclosure.

UL508 Listed; Type 4X; File No. E187045

NEMA Type 12 Models:
Maintains UL/cUL Type 12 when properly installed on a UL/cUL Type 12 enclosure.

UL508 Listed; Type 12; File No. E187045

APPLICATION

Powered by compressed air, Vortex Cooling Systems generate chilled air to cool small enclosures without refrigerants or moving parts. These systems are exceptionally reliable and low maintenance, even in the harshest and dirtiest environments.

FEATURES

- Five-micron airline filter, 115 V solenoid
- Thermostat
- Ducting kit
- Cooling capacities to 2500 BTU/Hr. (733 W)

FINISH

Brushed satin aluminum or stainless steel

ACCESSORIES

(for the enclosure)
Can be installed on all enclosure product families.
Separate accessories include an in-line oil filter.

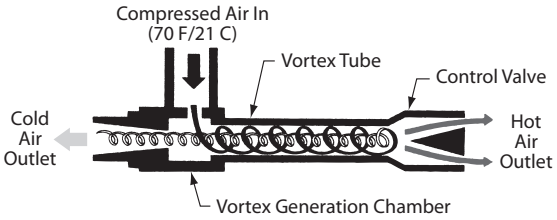

Vortex Tube Air Flow Schematic

Performance Data **VC Series NEMA Type 12**

CATALOG NUMBERS				
Aluminum	VC0416012	VC0916012	VC1516012	VC2516012
COOLING PERFORMANCE				
Cooling Capacity (BTU/Hr.)	**400**	**900**	**1500**	**2500**
Cooling Capacity (Watts)	**117**	**264**	**440**	**733**
Compressed Air Consumption (SCFM)	8	15	25	35
Compressed Air Consumption (L^3/M)	227	425	708	991
SOUND LEVEL				
Noise Level (dB)	69	80	83	90
ENCLOSURE PROTECTION				
UL Type	Type 12			
ELECTRICAL DATA				
Rated Voltage	**115**	**115**	**115**	**115**
Frequency (Hz)	50/60	50/60	50/60	50/60
UNIT DIMENSIONS				
Weight (lb./kg)	5/2.27	6/2.72	6/2.72	6/2.72

Performance Data **VC Series NEMA Type 4, 4X**

CATALOG NUMBERS			
Aluminum	VC0916004	VC1716004	VC2516004
Stainless Steel	VC091604X	VC171604X	VC251604X
COOLING PERFORMANCE			
Cooling Capacity (BTU/Hr.)	**900**	**1700**	**2500**
Cooling Capacity (Watts)	**264**	**498**	**733**
Compressed Air Consumption (SCFM)	15	25	35
Compressed Air Consumption (L^3/M)	425	708	991
SOUND LEVEL			
Noise Level (dB)	83	86	90
ENCLOSURE PROTECTION			
UL Type	Type 4, 4X		
ELECTRICAL DATA			
Rated Voltage	**115**	**115**	**115**
Frequency (Hz)	50/60	50/60	50/60
UNIT DIMENSIONS			
Weight (lb./kg)	6/2.72	6/2.72	6/2.72

Vortex Cooling System Accessories

CATALOG NUMBERS		
	VCOF17	VCOF25
PERFORMANCE		
Description	Oil Filter	
Use with VCool Model Capacity	Up to 1700 BTU/Hr.	2500 BTU/Hr.

NEMA Type 12 - 400 BTU/Hr.

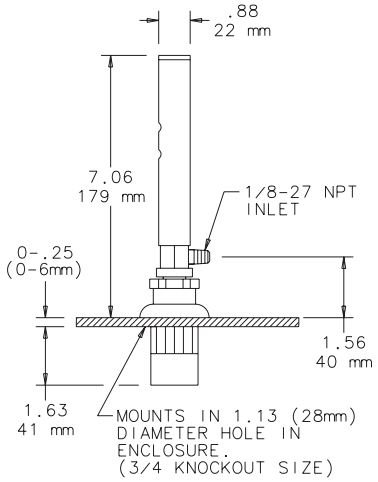

NEMA Type 12 -
900, 1500, 2500 BTU/Hr.

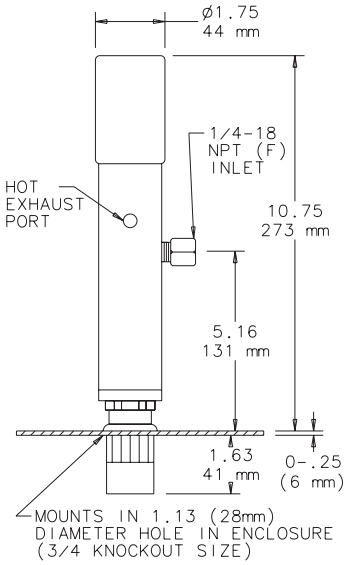

NEMA Type 4X
900, 1700, 2500 BTU/Hr.

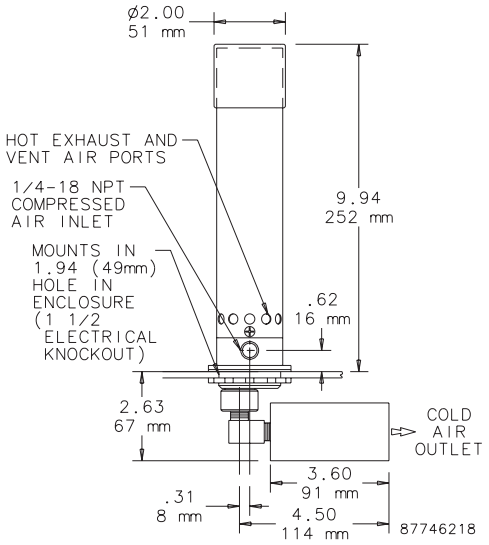

ENCLOSURE COOLER MUST REMAIN
IN A VERTICAL ORIENTATION TO
MAINTAIN NEMA 4/4X RATINGS.

3
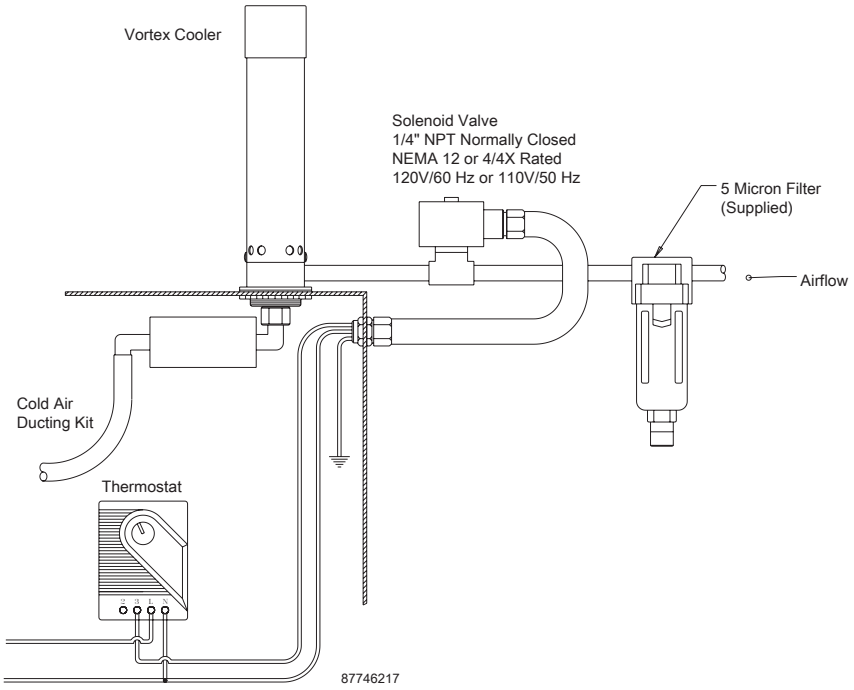
Typical Installation